LONG SEAMS

COURSE	ORIENTATION
1(TOP)	35°
2	30°

*VERT – TOP TO BOTTOM

Ship loose items:
NONE

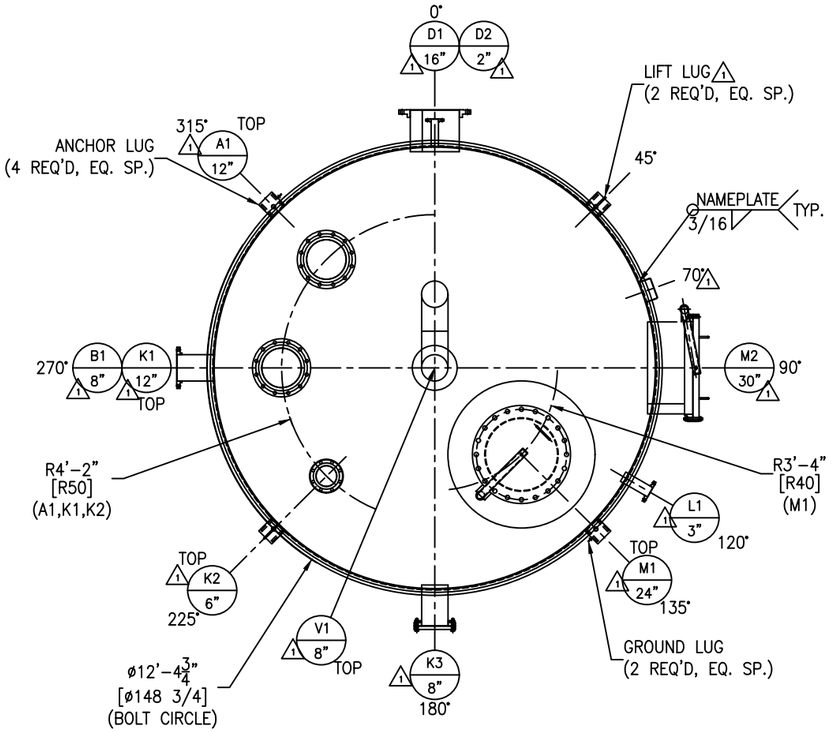

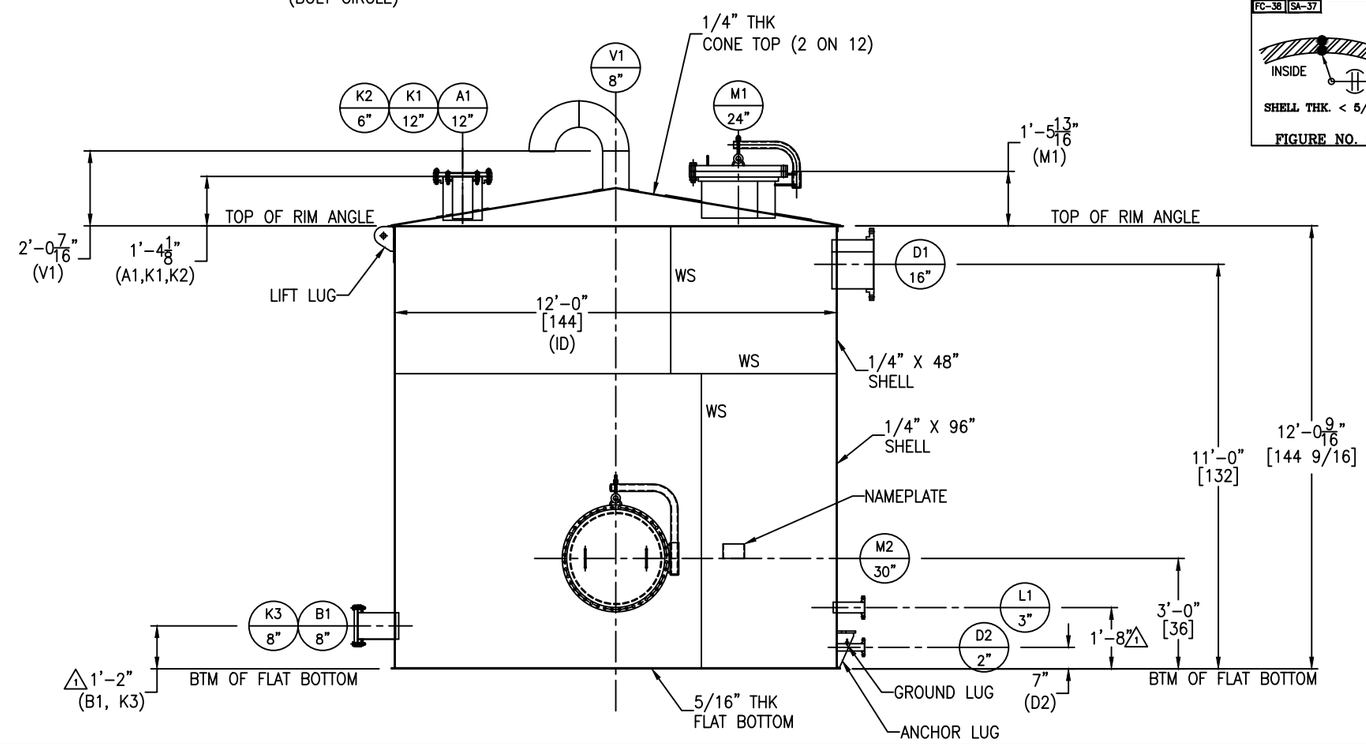

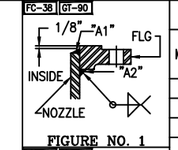

FIGURE NO. 1

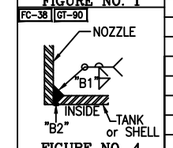

FIGURE NO. 4

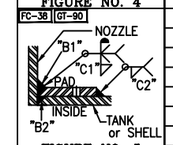

FIGURE NO. 5

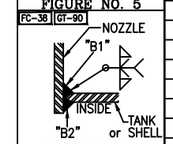

FIGURE NO. 7

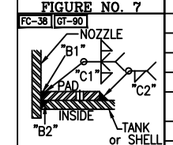

FIGURE NO. 8

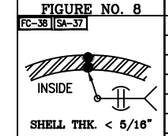

FIGURE NO. 9

NOZZLE SCHEDULE

MARK	SERVICE	SIZE	RATING	TYPE / STYLE	NECK SCHED.	PROJECTION EXT. (℄)	PROJECTION INT. (MIN.)	WELD FIGURE	REPAD SIZE (WIDTH X THK.)	WELD SIZE "A1"	WELD SIZE "A2"	WELD SIZE "B1"	WELD SIZE "B2"	WELD SIZE "C1"	WELD SIZE "C2"
B1	OUTLET	8"	150#	RFSO	80	12"	–	1,4	–	1/2	1/2	1/4	1/8	–	–
A1	INLET	12"	150#	RFSO	80	SEE DWG	1"	1,8	2" X 1/4"	11/16	11/16	1/4	1/8	1/4	1/4
D1	OVERFLOW	16"	150#	RFSO	1/2"	12"	1"	1,7	–	1/2	1/2	1/4	1/4	–	–
L1	LEVEL TRANSMITTER	3"	150#	RFSO	80	9"	1"	1,7	–	5/16	5/16	1/4	1/4	–	–
D2	DRAIN	2"	150#	RFSO	80	9"	–	1,4	–	3/16	3/16	1/4	1/8	–	–
V1	VENT	8"	150#	PIPE W/ELBOWS	80	SEE DWG	–	5	3" X 1/4"	–	–	1/4	1/8	1/4	1/4
M1	ROOF MANWAY	24"	150#	RFSO W/DAVIT	1/4"	SEE DWG	1"	1,8	12" X 5/16"	1/4	5/16	1/4	1/8	5/16	1/4
M2	SHELL MANWAY	30"	150#	RFSO W/DAVIT	1/4"	12"	1"	1,7	–	5/16	5/16	5/16	1/8	–	–
K1	SPARE	12"	150#	RFSO W/BLIND	80	SEE DWG	1"	1,8	2" X 1/4"	11/16	11/16	1/4	1/8	1/4	1/4
K2	SPARE	6"	150#	RFSO W/BLIND	80	SEE DWG	1"	1,8	2" X 1/4"	7/16	7/16	1/4	1/8	1/4	1/4
K3	SPARE	8"	150#	RFSO W/BLIND	80	12"	1"	1,7	–	1/2	1/2	1/4	1/4	–	–

MATERIALS OF CONSTRUCTION

	VESSEL
SHELL	SA36
HEADS	SA36
RIM ANGLE	SA36
NOZZLE NECKS	SA53–B ERW
NOZZLE FLANGES	SA105
MANWAY NECKS	SA36
MANWAY FLANGES	SA105
GASKETS	GARLOCK 5500
BOLTS/STUDS	SA193–B7 (ZINC PLATED)
NUTS	SA194–2H (ZINC PLATED)
REPADS	SA36
COUPLINGS	–
SUPPORTS/HOLD DOWNS	SA36
LIFTING LUGS	SA36
VACUUM RINGS	–
INSULATION RINGS	–
GROUND LUG	SA36
BAFFLE	–
LADDER	–
TANK CLIPS (LADDER)	–
HANDRAIL	–
HANDRAIL CLIPS	–
PLATFORM	–
PLATFORM CLIPS	–
DIPTUBE SUPPORT	–
JACKET SHELL	–
JACKET HEADS	–
JACKET NOZZLE NECKS	–
JACKET NOZZLE FLANGES	–

DESIGN DATA

	VESSEL
DESIGN AND FAB. CODE	API650
CERT. STAMP REQ'D.	NO
DESIGN PRESSURE	2 PSIG / 1 inH20
DESIGN TEMPERATURE	200° F
MIN. DESIGN METAL TEMP.	10° F @ 2 PSIG
OPERATING PRESSURE	1 PSIG
OPERATING TEMPERATURE	105° F
JOINT EFFICIENCY HEADS	0.70
JOINT EFFICIENCY SHELL	0.70
CORROSION ALLOWANCE	1/16"
SPECIFIC GRAVITY	1.0
EARTHQUAKE ZONE	1 Ss = (0.301) S1 = (0.091)
WIND LOAD	1 105 MPH
STRESS RELIEF	NOT REQ'D
RADIOGRAPHIC EXAM	NOT REQ'D
DYE PENETRANT EXAM	NOT REQ'D
MAGNETIC PARTICLE EXAM	NOT REQ'D
HYDROSTATIC TEST	NOT REQ'D
PNEUMATIC TEST	2 PSIG/ GAUGE #1
JKT DESIGN AND FAB. CODE	–
JKT CERT. STAMP REQ'D.	–
JKT DESIGN PRESSURE	–
JKT DESIGN TEMPERATURE	–
JKT MIN. DESIGN METAL TEMP.	–
JKT OPERATING PRESSURE	–
JKT OPERATING TEMPERATURE	–
JKT JOINT EFFICIENCY HEADS	–
JKT JOINT EFFICIENCY SHELL	–
JKT HYDRO TEST	–

VESSEL FINISH

INTERIOR WELD TREATMENT:	SAV TANK STANDARD
EXTERIOR WELD TREATMENT:	SAV TANK STANDARD
SAV TANK FINISHING STANDARD:	N/A
INSULATION:	N/A
PAINTING:	SEE NOTE 6

VESSEL CAPACITY AND WEIGHTS

OPERATING CAPACITY	8,470 GAL.
FULL CAPACITY	10,400 GAL.
EMPTY SHIPPING WEIGHT	10,600 LBS.
WEIGHT FULL OF WATER	97,900 LBS.
WEIGHT FULL OF PRODUCT	97,900 LBS.

QUALITY CONTROL

ENG. _____ DATE: _____

Q.C. _____ DATE: _____

This drawing is issued for customer approval. please review, make approval changes (if any) in red. check the appropriate box, sign & date.

- ☐ Approval – no changes. Please proceed with fabrication.
- ☐ Approved as noted. Please proceed with fabrication
- ☐ Not approved. Please make changes and resubmit.

Customer signature _____ Date _____

GENERAL NOTES

1.) COVER ALL FLANGES, OPENINGS & MACHINED SURFACES PRIOR TO SHIPMENT UNLESS OTHERWISE NOTED.

2.) BOLT HOLES TO STRADDLE 0° & 180° UNLESS OTHERWISE NOTED.

3.) NOZZLE REPADS TO HAVE (1) ø1/4" TELL–TALE HOLES ON HORIZONTAL CENTER LINE. ALL OTHER REPADS TO HAVE (1) ø1/4" WEEP HOLE AT LOWEST POINT ON PAD.

4.) MANUFACTURING TOLERANCE TO BE IN ACCORDANCE WITH API STANDARD 650 7.5.

5.) ASME MATERIALS TO CONFORM TO THE FOLLOWING: FLANGES – B16.5, FITTINGS – B16.9 & COUPLINGS – B16.11.

6.) PAINTING – SANDBLAST SP6. (2) COAT DURAPLATE 235 @ 6–8 MILS DFT & (1) COAT ACROLON 218 HS @ 3–5 MILS DFT.

REVISIONS

REV	D.BY	C.BY	DATE	DESCRIPTION
2				AS BUILT
1	RS	AD	8/5/25	CERTIFIED
0	AD	RS	7/16/25	APPROVAL

Savannah Tank & Equipment Corp.
1517 Telfair Road, Savannah, GA 31415
(912) 233–8902

DRAWN BY: AD
CHK'D BY: RS
APPROVED BY: NP
SCALE: 3/8" = 1'–0"

DOMTAR PAPER COMPANY LLC
DAF FILTRATE TANK
EQUIP. # 130.7801 1
CUST. PO # 4500817214

DRAWING NO.: 080–25–1 SHT 1 OF 4 REV. SET 1

FC-38

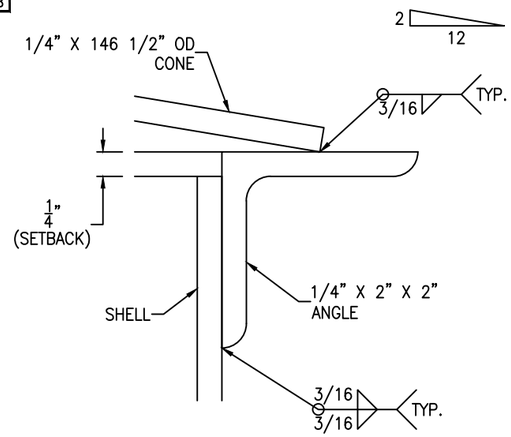

RIM ANGLE DETAIL

SCALE: 1'-0" = 1'-0"

FC-38

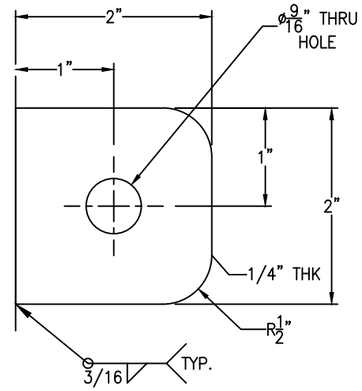

1 GROUND LUG IS LOCATED @ 135° & 315°

GROUND LUG DETAIL

(2 REQ'D) SCALE: 1'-0" = 1'-0"

FC-38

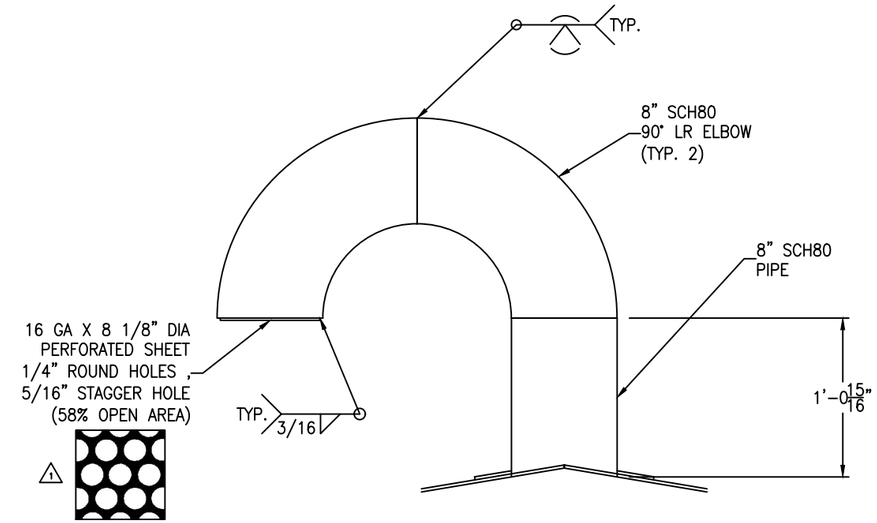

NOZZLE V1 DETAIL

SCALE: 1 1/2" = 1'-0"

FC-38

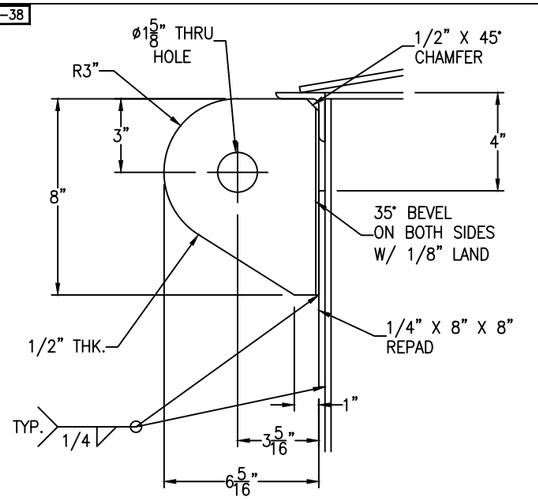

TANK WT. <= 20000#

SHACKLE PIN DIA. = 1 1/2"

1 LIFTING LUG IS LOCATED @ 45° & 225°

LIFT LUG DETAIL

1 (2 REQ'D) SCALE: 3" = 1'-0"

FC-38

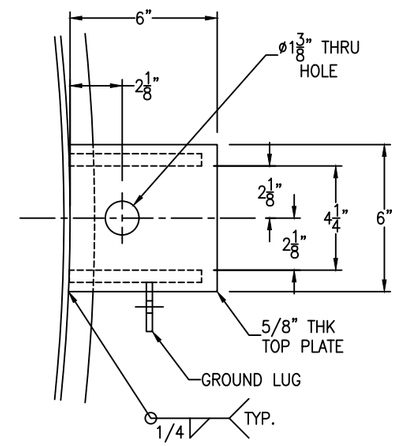

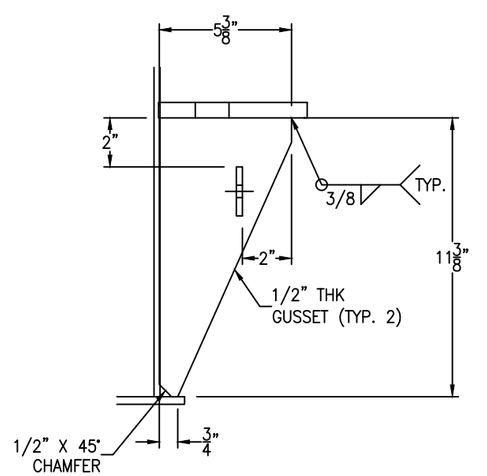

1 ANCHOR LUG IS LOCATED @ 45°, 135°, 225° & 315°

ANCHOR LUG DETAIL

(4 REQ'D) SCALE: 3" = 1'-0"

FC-38

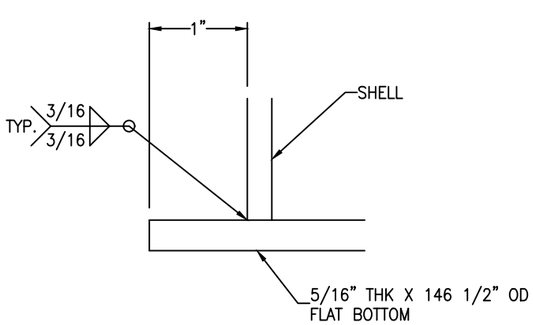

FLAT BOTTOM DETAIL

SCALE: 1'-0" = 1'-0"

Bolting for blinds

K1: (12) 7/8"-10 NC x 5" STUD
(24) 7/8"-10 NC HH NUT
(1) 12" 150# RING GASKET (GARLOCK 5500)

K2: (8) 3/4"-10 NC x 3 1/2" HH BOLT
(8) 3/4"-10 NC HH NUT
(1) 6" 150# RING GASKET (GARLOCK 5500)

K3: (8) 3/4"-10 NC x 3 1/2" HH BOLT
(8) 3/4"-10 NC HH NUT
(1) 8" 150# RING GASKET (GARLOCK 5500)

REV	D.BY	C.BY	DATE	DESCRIPTION
2				AS BUILT
1	RS	AD	8/5/25	CERTIFIED
0	AD	RS	7/16/25	APPROVAL

1 REVISIONS

Savannah Tank & Equipment Corp.
1517 Telfair Road, Savannah, GA 31415
(912) 233-8902

DRAWN BY: AD
CHK'D BY: RS
APPROVED BY: NP
SCALE: 3/8" = 1'-0"

DOMTAR PAPER COMPANY LLC
DAF FILTRATE TANK
EQUIP. # 130.7801 1
CUST. PO # 4500817214

DRAWING NO.: 080-25-2 | SHT 2 OF 4 | REV. SET 0

FC-38

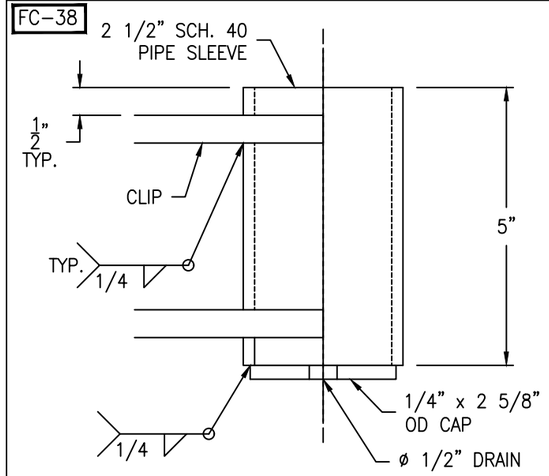

SLEEVE DETAIL

(1 REQ'D) SCALE: 6" = 1'-0"

FC-38

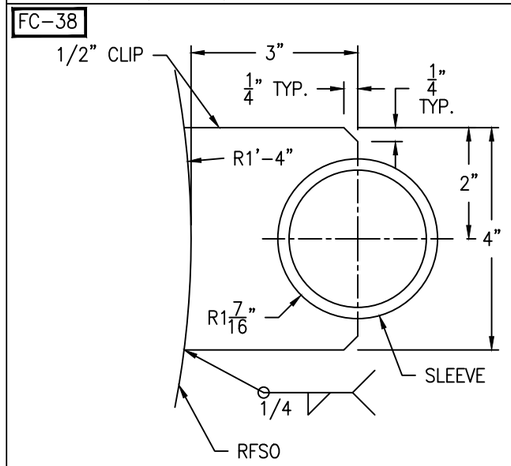

UPPER CLIP DETAIL

(1 REQ'D) SCALE: 6" = 1'-0"

FC-38

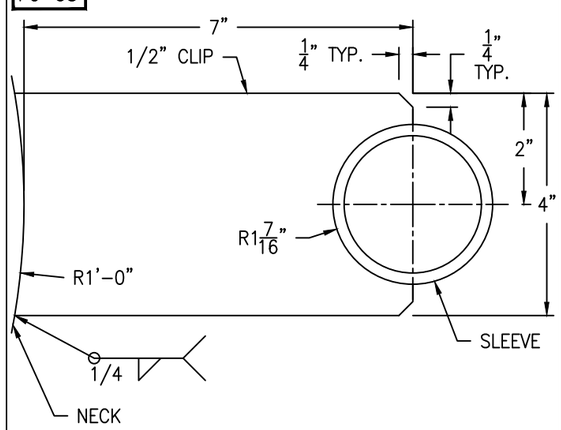

LOWER CLIP DETAIL

(1 REQ'D) SCALE: 6" = 1'-0"

FC-38

Bolting for blind
(20) 1 1/4-7 NC x 7" FULL THREADED STUD
(40) 1 1/4-7 NC HH NUT
(1) 24" 150# RING GASKET x 1/8" (GARLOCK 5500)

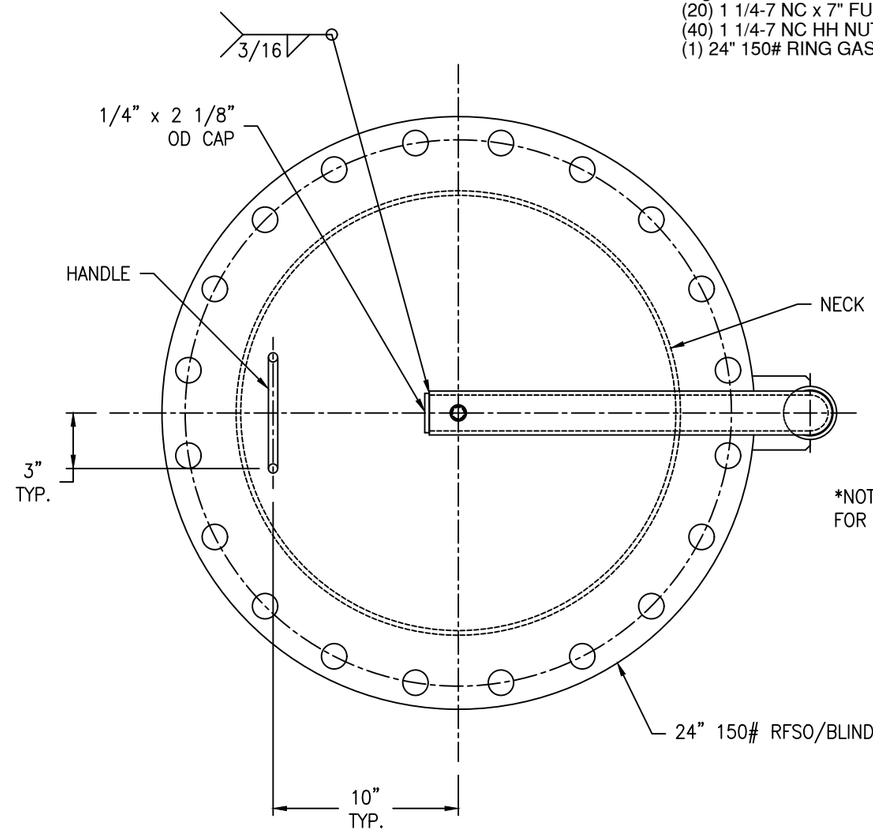

*NOTE: SEE VESSEL ORIENTATION FOR DAVIT LOCATION

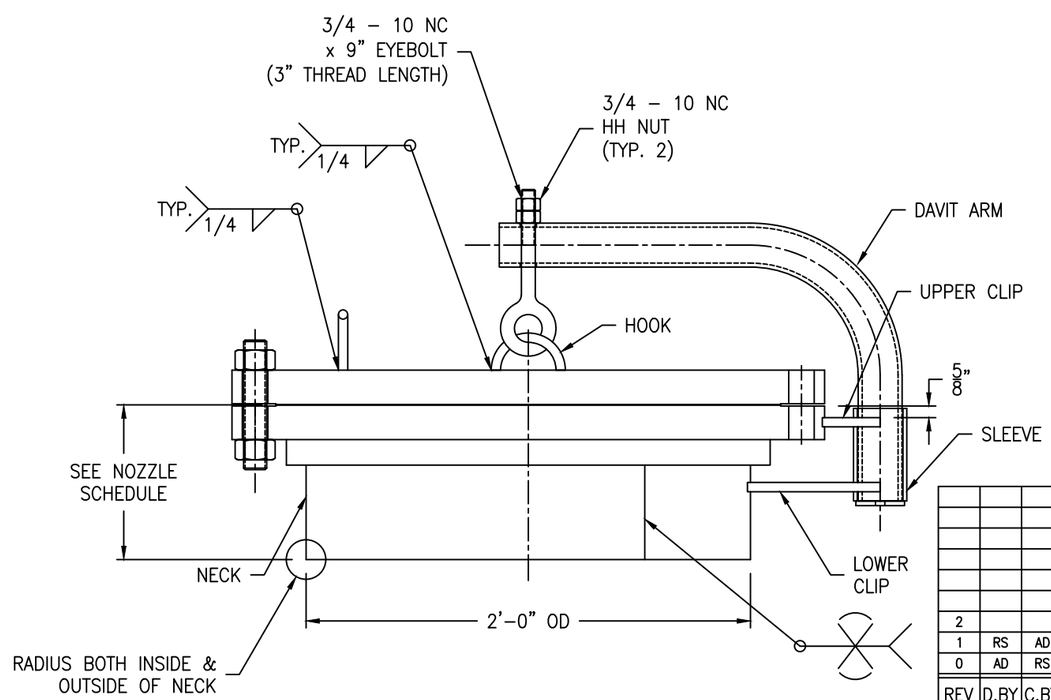

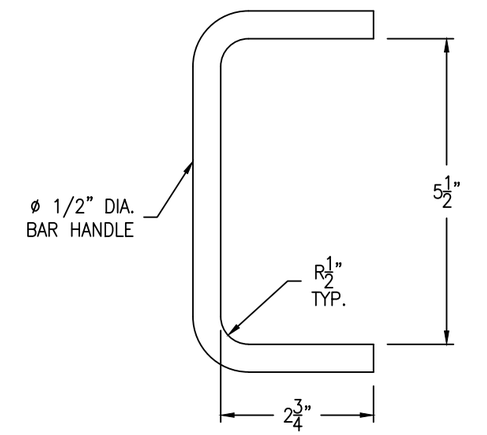

HANDLE DETAIL

(1 REQ'D) SCALE: 6" = 1'-0"

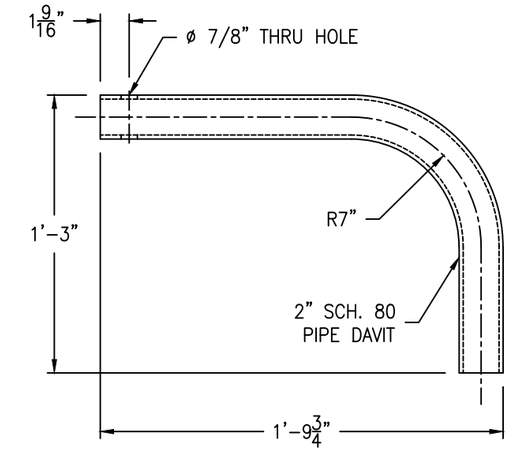

DAVIT ARM DETAIL

(1 REQ'D) SCALE: 2" = 1'-0"

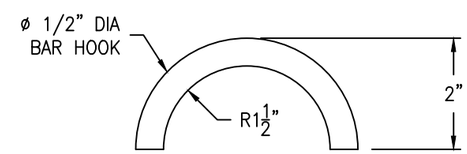

HOOK DETAIL

(1 REQ'D) SCALE: 6" = 1'-0"

REV	D.BY	C.BY	DATE	DESCRIPTION
2				AS BUILT
1	RS	AD	8/5/25	CERTIFIED
0	AD	RS	7/16/25	APPROVAL

1 REVISIONS

Savannah Tank & Equipment Corp.
1517 Telfair Road, Savannah, GA 31415
(912) 233-8902

DRAWN BY: AD
CHK'D BY: RS
APPROVED BY: NP
SCALE: 2" = 1'-0"

DOMTAR PAPER COMPANY LLC
DAF FILTRATE TANK
EQUIP. # 130.7801 1
CUST. PO # 4500817214

DRAWING NO.: 080-25-3 SHT 3 OF 4 REV. SET 1

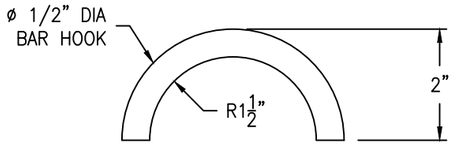

HOOK DETAIL

(1 REQ'D) SCALE: 6" = 1'-0"

FC-38

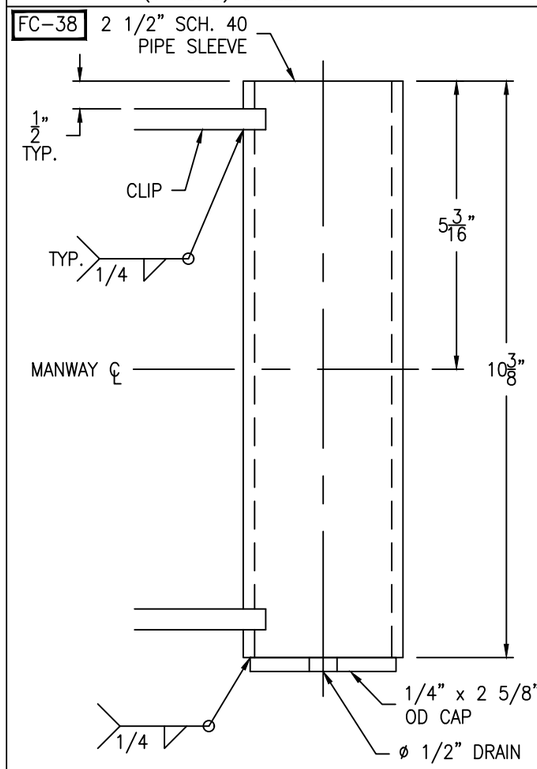

SLEEVE DETAIL

(1 REQ'D) SCALE: 6" = 1'-0"

FC-38

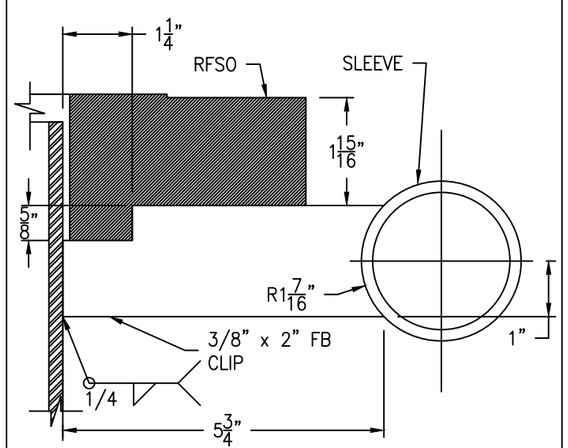

CLIP DETAIL

(2 REQ'D) SCALE: 6" = 1'-0"

FC-38

Bolting for blind
(44) 3/4"-10 NC x 6" FULL THREADED STUD
(88) 3/4"-10 NC HH NUT
(1) 30" 150# RING GASKET (32" OD X 30 1/4" ID) x 1/8" THK.
(GARLOCK 5500)

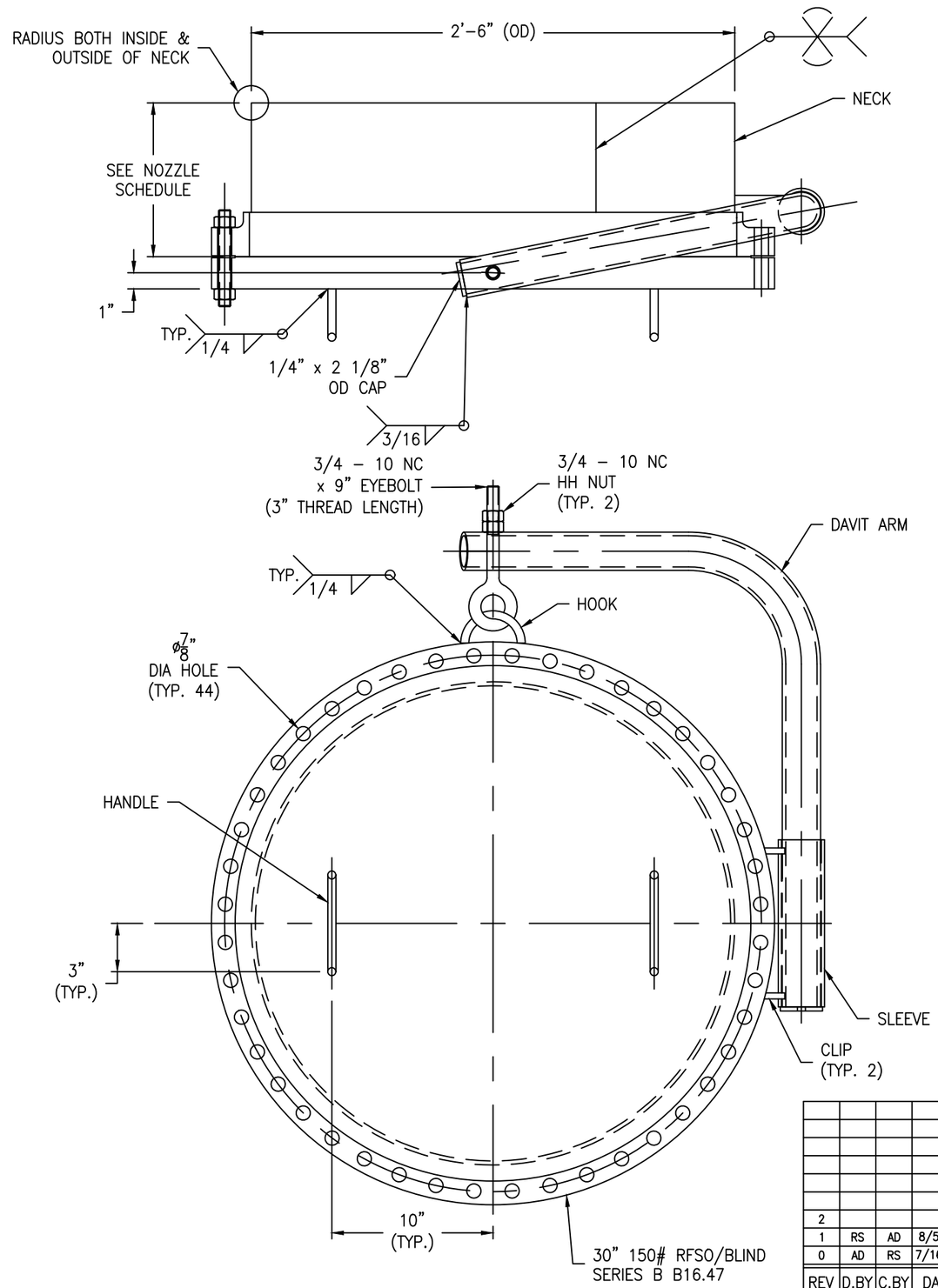

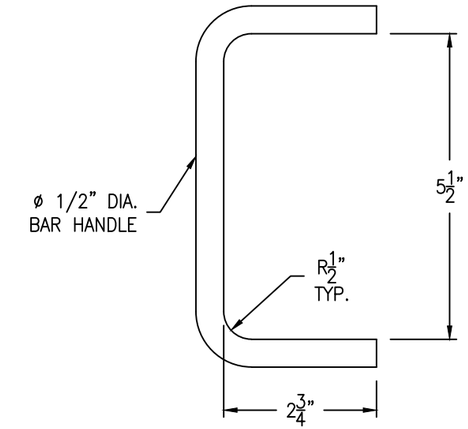

HANDLE DETAIL

(2 REQ'D) SCALE: 6" = 1'-0"

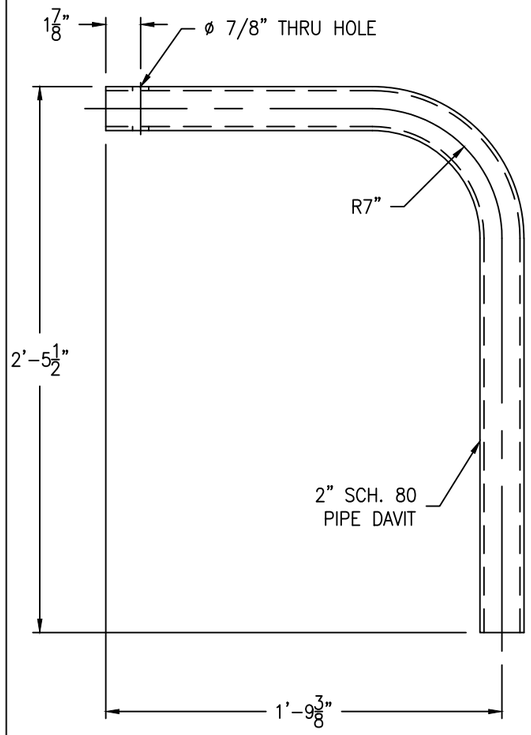

DAVIT ARM DETAIL

(1 REQ'D) SCALE: 2" = 1'-0"

REV	D.BY	C.BY	DATE	DESCRIPTION
2				AS BUILT
1	RS	AD	8/5/25	CERTIFIED
0	AD	RS	7/16/25	APPROVAL

△1 REVISIONS

Savannah Tank & Equipment Corp.
1517 Telfair Road, Savannah, GA 31415
(912) 233-8902

DRAWN BY: AD
CHK'D BY: RS
APPROVED BY: NP
SCALE: 2" = 1'-0"

DOMTAR PAPER COMPANY LLC
DAF FILTRATE TANK
EQUIP. # 130.7801△1
CUST. PO # 4500817214

DRAWING NO.: 080-25-3 SHT 3 OF 4 REV. SET 1